PEWA
Messtechnik GmbH

Weidenweg 21
58239 Schwerte

Tel.: 02304-96109-0
Fax: 02304-96109-88
E-Mail: info@pewa.de
Homepage : www.pewa .de

Model 4119
BNC Feed-Thru Termination

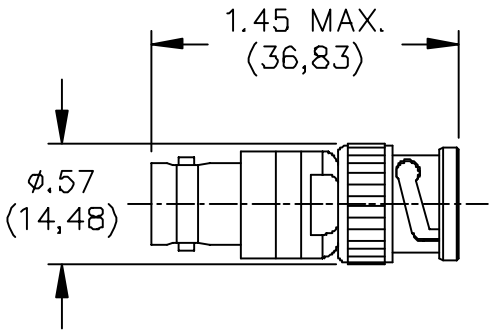

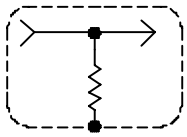

SCHEMATIC

MODEL NO.	* RESISTANCE VALUE Ω
4119–50	50
4119–75	75
4119–93	93
4119–600	600

MATERIALS:
Body and Fittings: Brass, Alloy 360, ½ Hard.
Center Contact: Male – Brass, Alloy 360, ½ Hard.
Female – Beryllium Copper per Cond. Ht.
Outer Contact: Beryllium Copper, Cond. Ht.
Dielectric: Teflon per L-P-403.
Gasket/Seals: Silicone rubber per zz-r-765, Class 11a, Grade 50.
Finish:
Body and Fittings: Tarnish Resistant.
Center Contact: Male – Gold plated.
Outer Contact: Tarnish Resistant.
Marking**:** "Pomona Elect. 4119-*" and resistance value marked on label.

Specifications**:** 2%, 2 Watt, Carbon-film resistor deposited over Ceramic Core.
VSWR: 1.1 Max. from D.C. to 250 MHz.
1.2 Max. from 250 MHz to 500 MHz.

RATINGS:
Operating Temperature: +102°C (+216°F) Max.

ORDERING INFORMATION: Model 4119-*
* = Resistance value (see table above)

All dimensions are in inches. Tolerances (except noted): .xx = ±.02" (,51 mm), .xxx = ± .005" (,127 mm).
All specifications are to the latest revisions. Specifications are subject to change without notice.
Registered trademarks are the property of their respective companies. Made in USA